# VMA 240

INDUSTRY LEADING 2 YEAR WARRANTY

INDUSTRY LEADING 7 YEAR GEARBOX WARRANTY

LONGREACH EQUIPMENT








- Extra heavy duty construction
- Rear door to enable ejection of grass in heavy mowing applications
- Easy maintenance and replacement of hammers
- Ideal machine in vineyards and orchards
- 5 belt “b” section belt drive
- Precisely manufactured and balanced rotor
- High strength long life hammers
- Hydraulic offset fitted standard
- Manufactured to the highest European standard
- 2 year full factory warranty. Full spare parts availability.

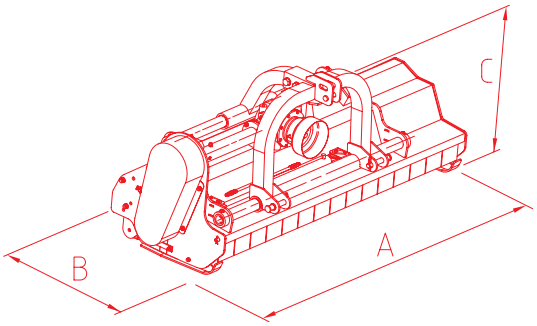


| | hp | | | | | | | A | B | C | KG |
|---|---|---|---|---|---|---|---|---|---|---|---|
| cm | min | max | cm | n° | n° | n° | rpm | cm | cm | cm | kgs |
| 239 | 60 | 120 | 52 ⊣ 127<br>92 ⊣ 87 | 24 | N/A | 5 | 540 | 255 | 128 | 100 | 675 |

| PRICE | $11,550.00 incl GST |
|---|---|