VFLA 125

INDUSTRY LEADING 2 YEAR WARRANTY

INDUSTRY LEADING 7 YEAR GEARBOX WARRANTY

LONGREACH EQUIPMENT





- Precision built for medium hp tractors
- Precisely manufactured and balanced rotors
- Low hp requirement
- Perfect for smaller tractors and farm sizes
- Freewheel gearbox to minimise stresses
- High strength long life hammers
- Manufactured to the highest European standard
- 2 year full factory warranty. Full spare parts availability.

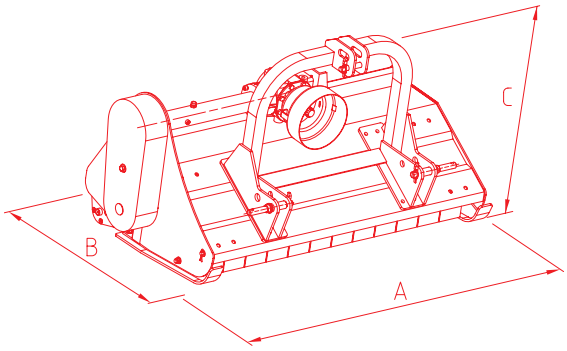

	hp							A	B	C	
cm	min	max	cm	n°	n°	n°	rpm	cm	cm	cm	kgs
125	25	55	61–64	20	40	3	540	137	92	95	249

PRICE	$3,890.00 incl GST