VMZ 220

INDUSTRY LEADING 2 YEAR WARRANTY

INDUSTRY LEADING 7 YEAR GEARBOX WARRANTY

LONGREACH EQUIPMENT





- Extra heavy duty construction
- Opening rear door for easy maintenance and to eject material inheavy conditions
- 14 rear rakes to lift prunings and debris into the mulching chamber
- 5 “b” section belt drive
- Heavy duty gearbox
- Hydraulic offset
- Rear roller and skids standard
- Perfect vinyard/orchard machine
- Industry leading 2 year warranty
- Rakes are removable.

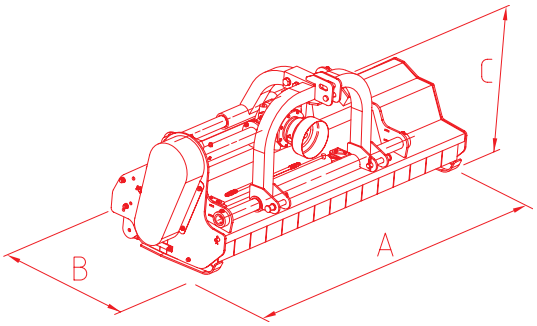

								A	B	C	
cm	min	max	cm	n°	n°	n°	rpm	cm	cm	cm	kgs
219	60	120	52–167	20	N/M	5	540	235	105	110	725

PRICE	$11,900.00 incl GST